32" STAINLESS STEEL 70/30 DOUBLE SINK
CDS-S3273

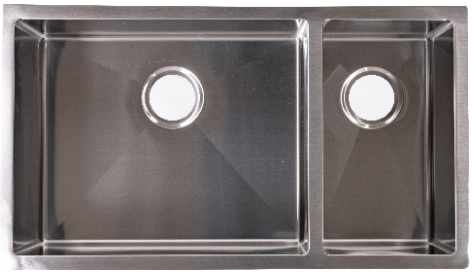

DIMENSIONS

- 32" x 19" x 10" Deep (External Dimensions)
- 30" x 17" x 10" Deep (Internal Dimensions)

FEATURES

- Premium 304 Stainless Steel Construction
- Commercial Grade, 18 Gauge Stainless Steel
- Professional Design
- SilenceTech Sound Dampening Technology
- CleanCurve R10 Radius Corners for Easy Maintenance
- Standard 3 1/2" Drain Opening
- Easy Installation
- Lifetime Warranty

FINISH

- Hand Brushed Stainless Steel

WARRANTY
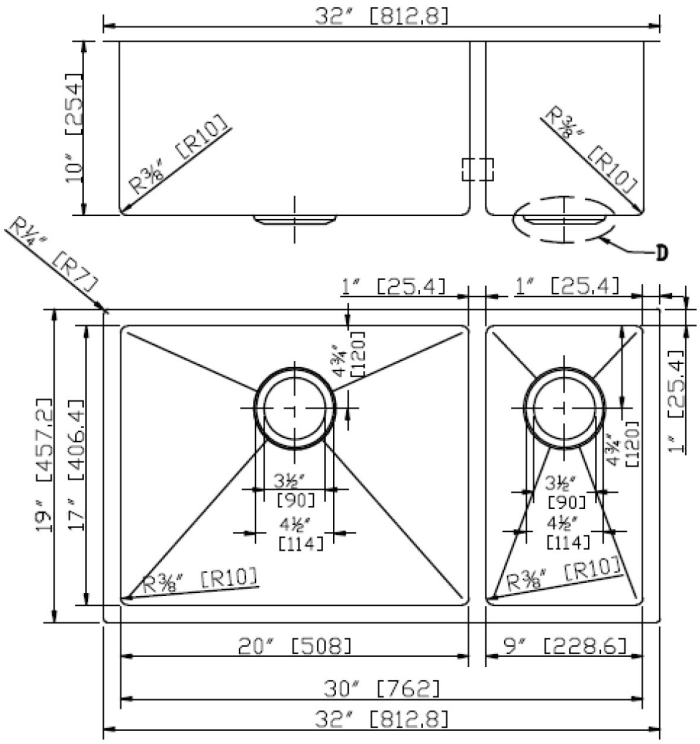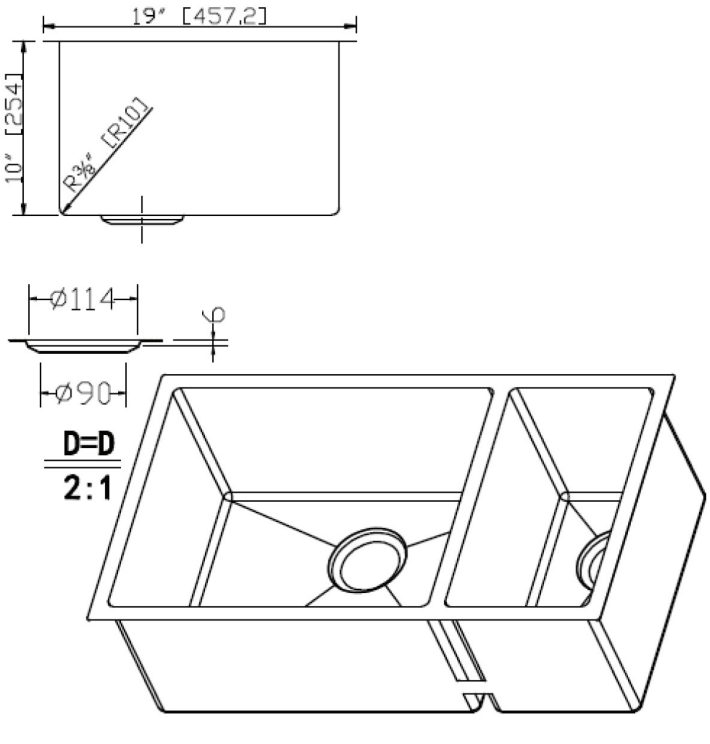
- Lifetime Warranty